Ion Source or Plasma Source?

Staff of Kaufman & Robinson, Inc.

INTRODUCTION

Sources used in ion-assisted deposition are sold as either ion or plasma sources, implying a difference between the two. Gridded ion sources use the electrostatic acceleration of ions between grids to accelerate ions.[1] These sources have been generally known as "ion sources." They operate best at background pressures of a fraction of a mTorr and generate useful ion-beam currents at ion energies of several hundred eV or more. Gridless ion sources use the electromagnetic acceleration of ions in a quasi-neutral plasma to accelerate ions.[1] The most common gridless ion sources (end-Hall ion sources) usually operate at ion energies of 40 to 200 eV, but have also been operated at ion energies down to 20-30 eV or less.[2,3] Gridless sources have been called both "ion sources,"[4] and "plasma sources."[5] What is the difference between an ion source and a plasma source? As described above, sometimes an ion source generates higher ion energies. And sometimes there is no difference.

CHARGE-NEUTRALIZED ION BEAM

A plasma is an electrically conductive gas with approximately equal charge densities of negative electrons and positive ions. As an example, consider a cylindrical beam of Ar^+ ions that is 10 cm in diameter, has a current density of 1 mA/cm^2, and an ion energy of 1000 eV. The density of ions in this beam can be calculated and is about 9×10^8 cm^{-3}. Ignoring electrons, this would give a charge density of $1.6\times10^{-19}\times9\times10^8 = 1.4\times10^{-10}$ C/cm^{-3}. If we use Poisson's equation to integrate from the outside edge of the ion beam to the ion-beam axis, the potential on the axis is found to be about 10,000 V higher than the outside of the beam. (If you wish to duplicate this calculation, the ion beam is assumed to be a long cylinder. An *additional* potential difference between the outside edge of the ion beam and the surrounding hardware such as the vacuum-chamber wall has been ignored in this calculation.)

The ions were assumed to have an energy of 1000 eV. Singly-charged ions, the usual charge state for ions in ion beams, would have sufficient kinetic energy to reach a region with a positive potential of only 1000 V. The potential on the beam axis of 10,000 V is clearly unrealistic. If the potential of such an ion beam is actually measured, the value would be of the order of 10 V, not 10,000 V. What this means is that the ion beam being considered should have about 999 electrons for every 1000 Ar^+ ions, and the quasi-neutrality requirement (almost equal electron and ion densities) of a plasma is satisfied. Quasi-neutrality is a standard requirement for ion beams used for ion-assisted deposition. For a low-energy gridless ion source, the ion density is even higher than the example given above and the beam *must* be a charge-neutralized plasma. This is true regardless of whether the source is called an "ion source" or a "plasma source."

CHARACTERIZATION OF THE ION BEAM

The ion-assist function is performed by ions. Electrons are necessary for neutralization, but do not cause the motion of substrate atoms required for ion assist. The understanding of ion-assisted deposition is evolving from the early *ad hoc* trial-and-error approaches towards the more efficient engineering calculation of recipes.[6-8] A necessary part of this engineering approach is knowing the spatial and energy distributions of the ions used in the ion-assist process.

This knowledge requires probe surveys of the ion beam. As an example of the problems that can be encountered in these surveys, consider the simple planar probe shown in Fig. 1. In this probe, the current collector is biased negative to reflect electrons and collect the arriving ions. A shield surrounds the collector to limit the ion collection to the exposed surface of the collector. It is customary to ground the shield (Fig. 1(a)) at high ion energies, where ions follow linear trajectories. At low ion energies, however, this probe circuit will collect an excessive ion current (by as much as a factor of two[3]), as shown by the deflected ion trajectories in Fig. 1(a). To avoid the deflection of low-energy ion trajectories toward the collector, it is necessary to have the surrounding shield at the same negative potential as the collector, as shown in Fig. 1(b). This moves the region where low-energy ions are deflected to the outside of the shield, away from the collector. Assuming one corrects for secondary electron emission, a planar probe (Fig. 1) is suitable for measuring the arrival rate of ions at the substrate location. A more complicated probe is required for measuring the energy distribution of those ions. Further discussion of probes useful for characterizing low-energy ion beams can be found in literature.[3]

Faraday cups have also been used to characterize an ion beam.[9] A faraday cup has a collector inside a grounded cup. When used at low ion energy, such a configuration is also subject to a trajectory-bending error near the edge of the aperture. A Langmuir probe is an even poorer choice for ion-beam characterization. Such a probe provides ion-density and electron-temperature information, but does not predict the arrival rate of ions at a flat substrate surface.

Tel: 970-495-0187, Fax: 970-484-9350, Internet: www.ionsources.com

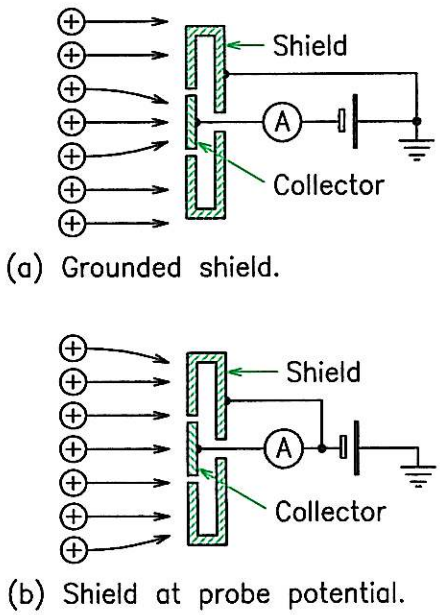

Fig. 1. Planar probe with different shield potentials.

MINIMUM ION ENERGY

Ion-assisted deposition where the assist process extends beneath the surface of a deposited film, as opposed to just removing physisorbed contaminants such as water from the surface, requires a minimum ion energy of about 25 eV.[6,7]

Most equipment configurations used in ion-assisted deposition require that the ions from the source be directed at substrates located at some distance from the source. A significant ion energy is also required for the majority of the ions leaving the source to propagate as an ion beam and reach the substrate. If the ion energy is too low (if the ion directed energy approaches the random energy of the electrons), the ions will tend to flow outward in all directions and mostly strike the walls of the vacuum chamber.

CONCLUDING REMARKS

All ion and plasma sources suitable for ion-assist applications generate charge-neutralized beams of ions and electrons. The charge-neutralized state of these beams satisfies the definition of a plasma, regardless of what the source is called. The ion distribution must be characterized with probes suitable for that purpose if the ion-assist information available from literature is to be effectively used.

To be useful in most ion-assist applications the minimum ion energy should be about 25 eV. A significant ion energy is also required for ions to propagate as a directed beam, instead of simply flowing outward in all directions.

REFERENCES

1. Staff of K&R, "Broad-Beam Industrial Ion Sources," *Technical Note KRI-01*, 2003.
2. V.V. Zhurin, H.R. Kaufman, J.R. Kahn, and T.L. Hylton, "Biased Target Deposition," *J. of Vacuum Science and Technology A*, **18**, 37-41, 2000.
3. J.R. Kahn, H.R. Kaufman, R.E. Nethery, R.S. Robinson, and C.M. Shonka, "Low energy End-Hall Ion Source Characterization at Millitorr Pressures," *48th Annual Technical Conference Proceedings of the Society of Vacuum Coaters*, 445-451, 2005.
4. H.R. Kaufman, R.S. Robinson, and R.I. Seddon, "End-Hall Ion Source," *J. of Vacuum Science and Technology A*, **A5**, 2081-2084, 1987.
5. S. Pongratz and A. Zöller, "Plasma Ion-Assisted Deposition: "A Promising Technique for Optical Coatings," *J. of Vacuum Science and Technology A*, **A10**, 1897-1904, 1992.
6. H.R. Kaufman and J.M.E. Harper, "Ion-Assist Applications of Broad-Beam Ion Sources," *Proceedings of SPIE*, **5527**, 50-68, 2004.
7. H.R. Kaufman and J.M.E. Harper, "Development and Applications of Ion Sources," *50th Annual Technical Conference Proceedings of the Society of Vacuum Coaters*, 2007.
8. Staff of K&R, "Ion-Assist Doses," *Technical Note KRI-05*, 2005, 2006.
9. D. Gardner and W. Sainty, "Characterization of a High Output Gridless Ion Source," *48th Annual Technical Conference Proceedings of the Society of Vacuum Coaters*, 95-99, 2007.